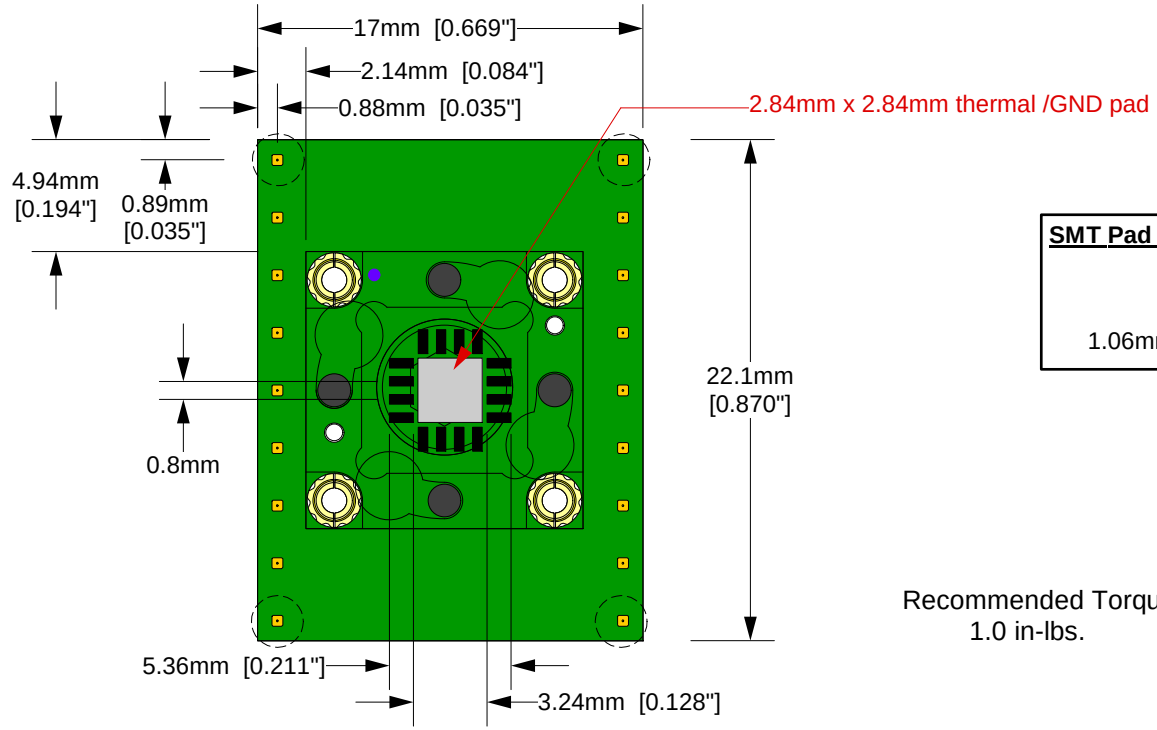

Top View

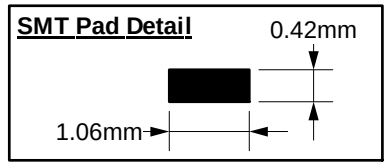

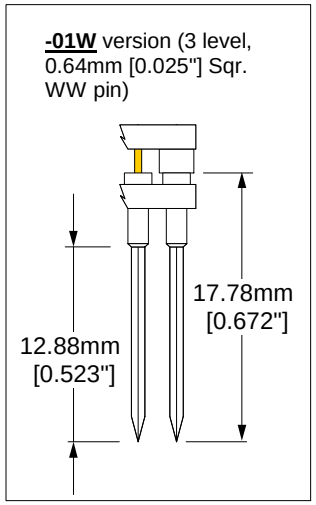

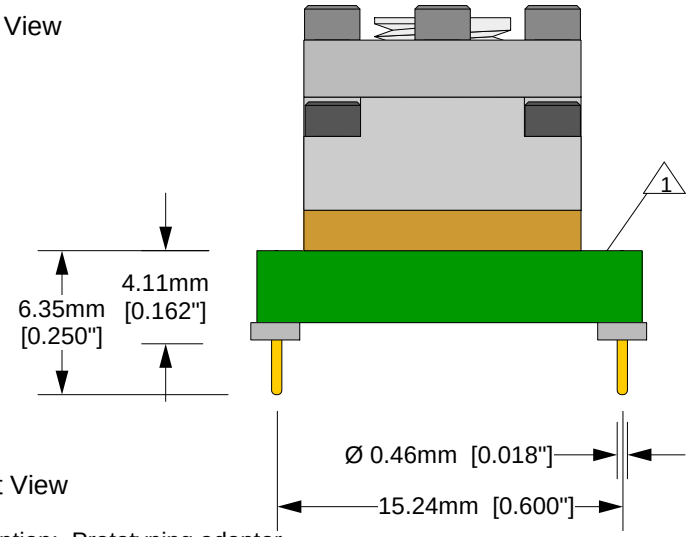

Front View

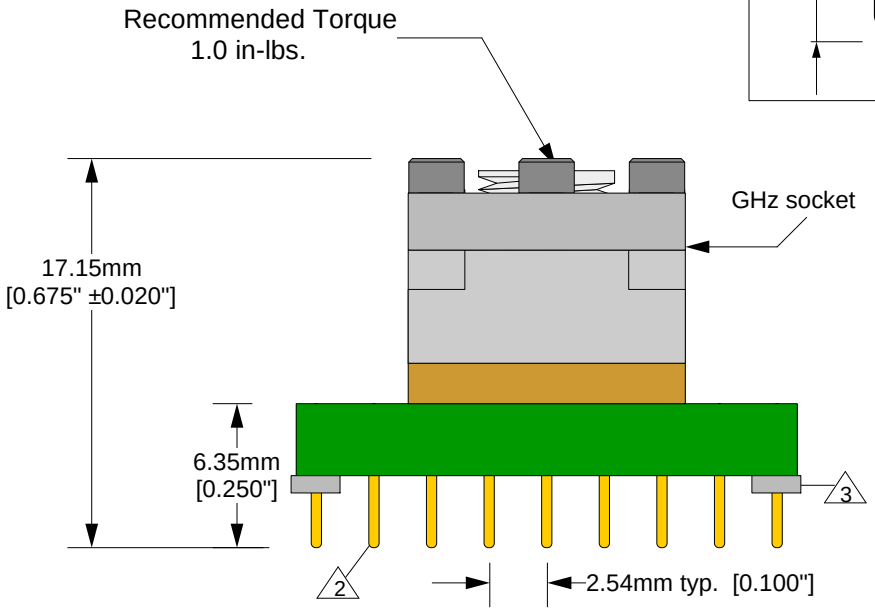

Side View

Description: Prototyping adaptor
16 position, MLF GHz socket (-Z version) to type PGA base pins (0.100" centers).
Add "W" to end of part number for inclusion of optional wire wrap sub base.

1. Substrate: 0.125"±0.007" FR4/G10 or equivalent high temp material. 1/2 oz. Cu clad. SnPb plating
2. Pins: Material- Brass Alloy 360 1/2 hard; finish- 10µ" Au over 50µ" Ni (min.).
3. Stand-off: material- Teflon; 0.090" Dia; 0.030" thick.

PA-MLF16C-P-Z-01(W) Drawing	Status: Released	Scale: 3:1	Rev: D
© 2008 IRONWOOD ELECTRONICS, INC. Tele: (800) 404-0204 www.ironwoodelectronics.com	Drawing: MA Fedde	Date: 2/25/03	
	File: PA-MLF16C-P-Z-01 Dwg	Modified: 04/09/14	

All tolerances: ±0.005" (unless stated otherwise).
Materials and specifications are subject to change without notice.