SG-BGA DIRECT MOUNT, SOLDERLESS SOCKET FOR BURN-IN AND TEST APPLICATIONS

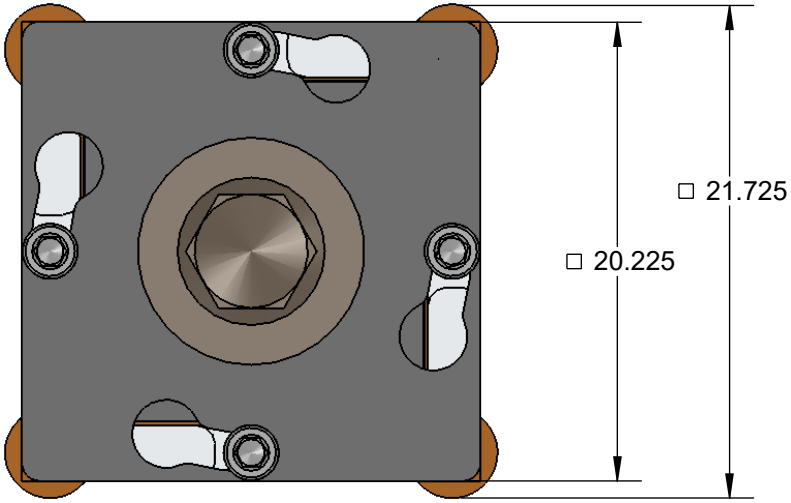

TOP VIEW

Features

- Directly mounts to target PCB (needs tooling holes) with hardware
- High speed, reliable Elastomer connection
- Minimum real estate required
- Compression plate distributes forces evenly
- Ball guide prevents over compression of elastomer
- Easily removable swivel socket lid

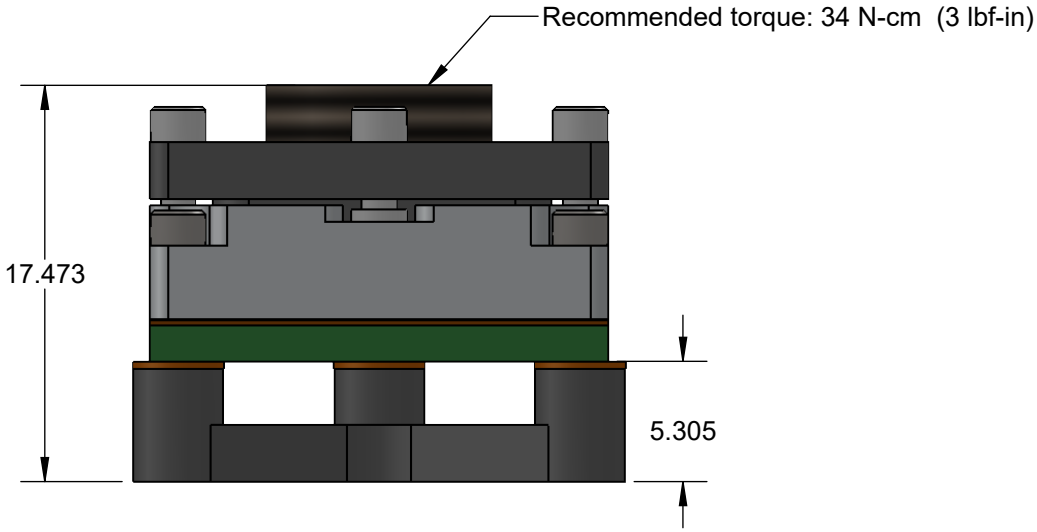

FRONT VIEW

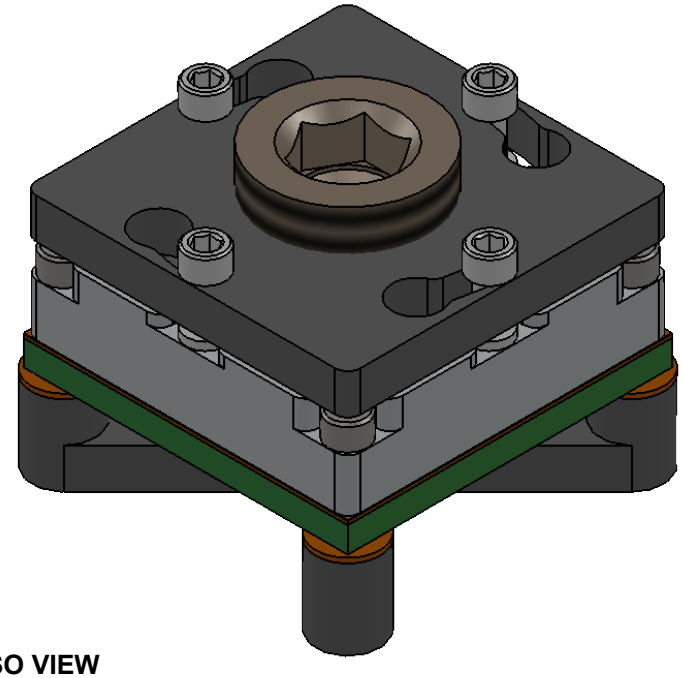

ISO VIEW

Description: SG-BGA Socket

Primary dimension units are millimeters, Secondary dimension units are [inches], Weight is in grams.

Tolerances: Hole diameters ±0.03mm [±0.001"], Pitches (from true position) ±0.025mm [±0.001"], substrate thickness tolerance ±10%, all other tolerances ±0.13mm [±0.005"] unless stated otherwise. Materials and specifications are subject to change without notice.

SG25-BGA-2012 Drawing	Material: N/A Finish: N/A Weight: 10.64	STATUS: Released	SHEET: 1 OF 4	REV. A
 Tele: (800) 404-0204 www.ironwoodelectronics.com		ENG: M.A. Fedde	DRAWN BY: M. Raske	SCALE: 3:1
		FILE: SG25-BGA-2012 Dwg	DATE: 01/26/2016	

****Array is offset 0.25mm to the right of center with respect to the tooling holes.**

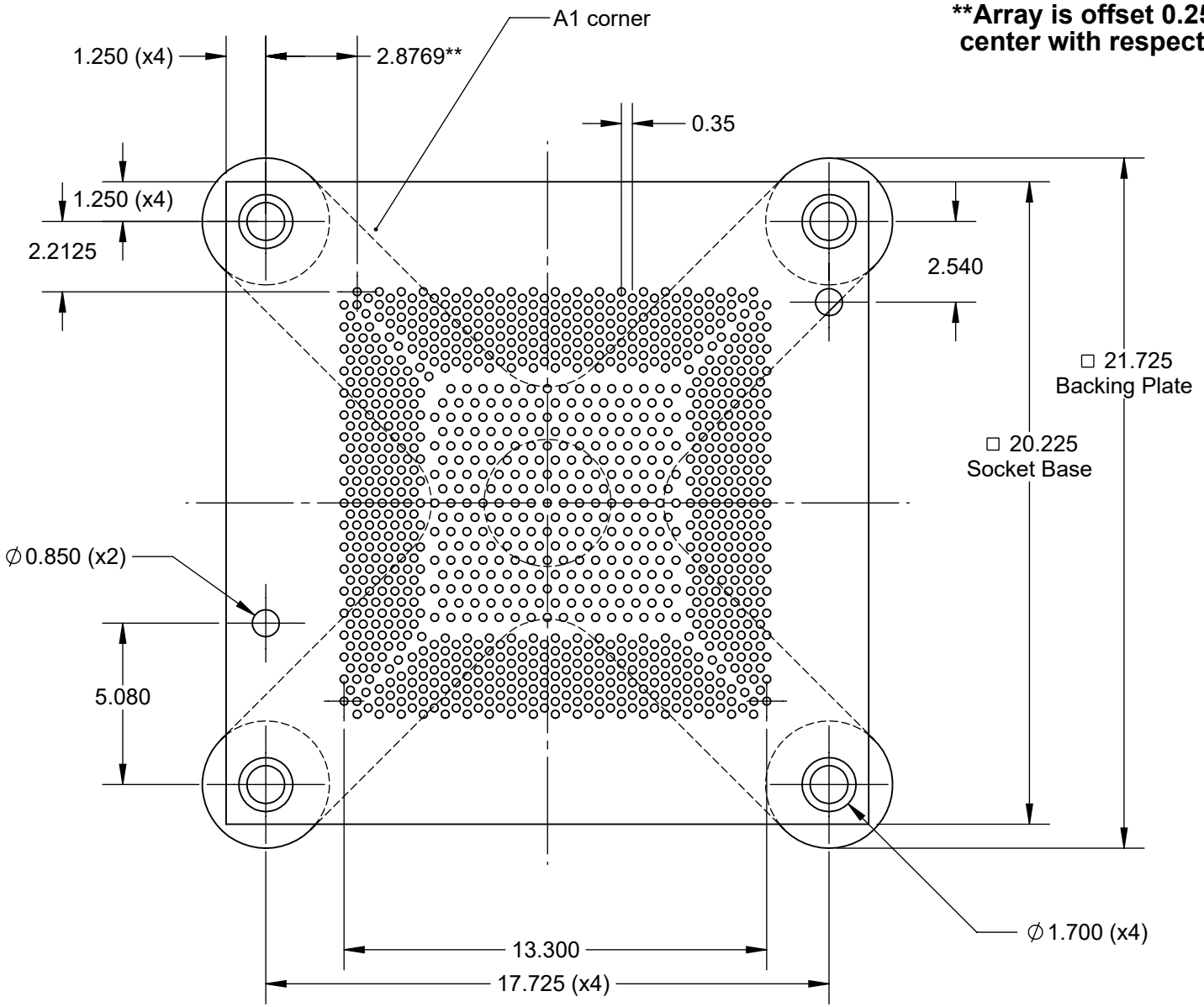

Top view

Target PCB Recommendations
Total thickness: 1.6mm min.
Plating: Gold or Solder finish
PCB Pad height: same or higher than solder mask

Description: Recommended PCB Layout

Primary dimension units are millimeters, Secondary dimension units are [inches], Weight is in grams.

Tolerances: Hole diameters ±0.0254mm [±0.001"], Pitches (from true position) ±0.0762mm [±0.003"], substrate thickness tolerance ±10%, all other tolerances ±0.127mm [±0.005"] unless stated otherwise. Materials and specifications are subject to change without notice.

SG25-BGA-2012 Drawing	Material: N/A Finish: N/A Weight: 10.64	STATUS: Released	SHEET: 2 OF 4	REV. A
 Tele: (800) 404-0204 www.ironwoodelectronics.com		ENG: M.A. Fedde	DRAWN BY: M. Raske	SCALE: 5:1
		FILE: SG25-BGA-2012 Dwg	DATE: 01/26/2016	

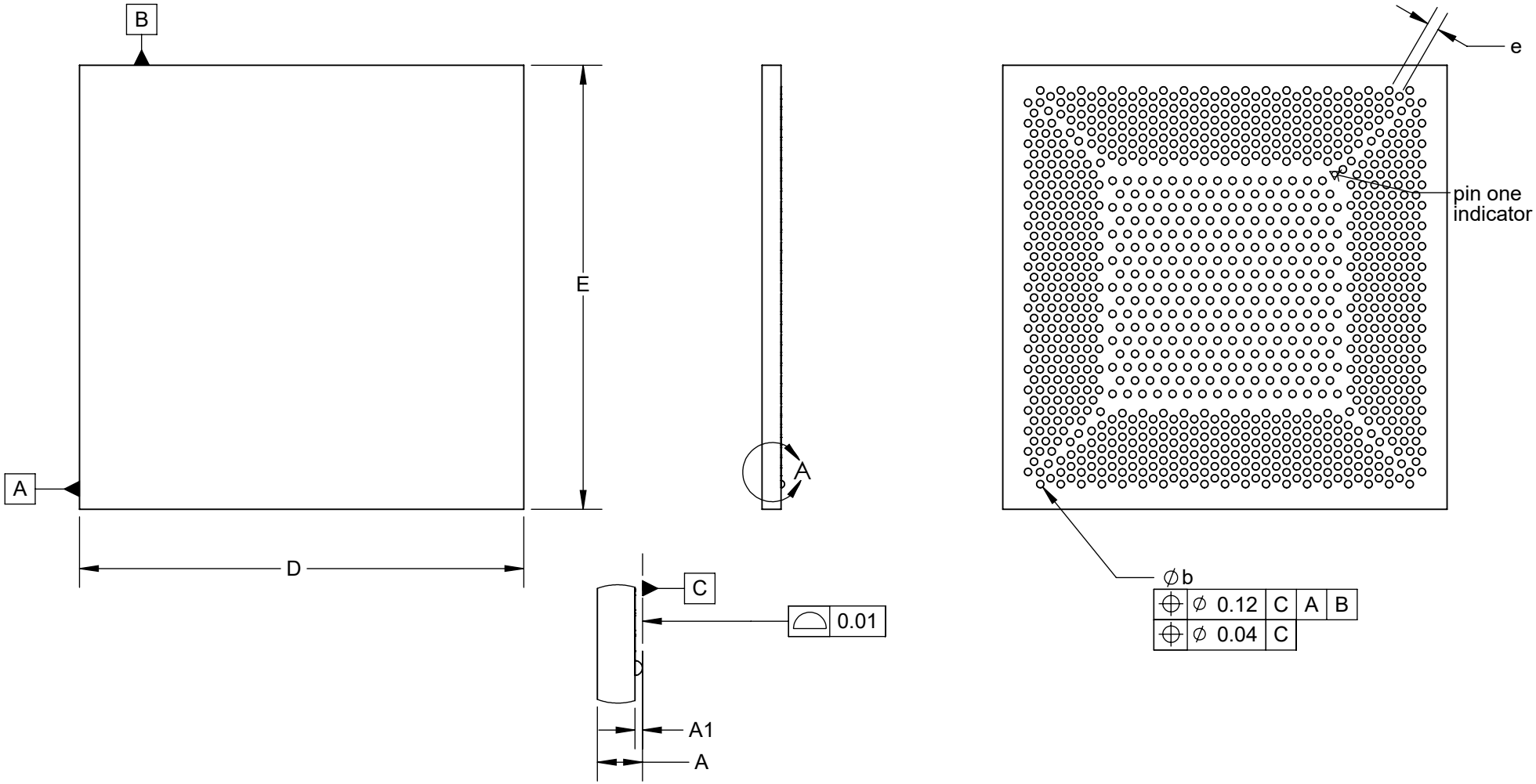

DETAIL A
SCALE 10 : 1

1. Dimensions are in millimeters.
2. Interpret dimensions and tolerances per ASME Y14.5M-1994.
3. Dimension b is measured at the maximum solder ball diameter, parallel to datum plane Z.
4. Datum Z (seating plane) is defined by the spherical crowns of the solder balls.
5. Parallelism measurement shall exclude any effect of mark on top surface of package.

DIM	Minimum	Maximum
A	14.955	15.045
A1	0.086	0.146
b	0.22	0.28
D	15.00 BSC	
E	15.00 BSC	
e	0.40 BSC	
ARRAY	61x61	

Description: Compatible BGA

Primary dimension units are millimeters, Secondary dimension units are [inches], Weight is in grams.

Tolerances: Hole diameters ±0.03mm [±0.001"], Pitches (from true position) ±0.025mm [±0.001"], substrate thickness tolerance ±10%, all other tolerances ±0.13mm [±0.005"] unless stated otherwise. Materials and specifications are subject to change without notice.

SG25-BGA-2012 Drawing	Material: N/A Finish: N/A Weight: 10.64	STATUS: Released	SHEET: 3 OF 4	REV. A
 Tele: (800) 404-0204 www.ironwoodelectronics.com		ENG: M.A. Fedde	DRAWN BY: M. Raske	SCALE: 5:1
		FILE: SG25-BGA-2012 Dwg	DATE: 01/26/2016	

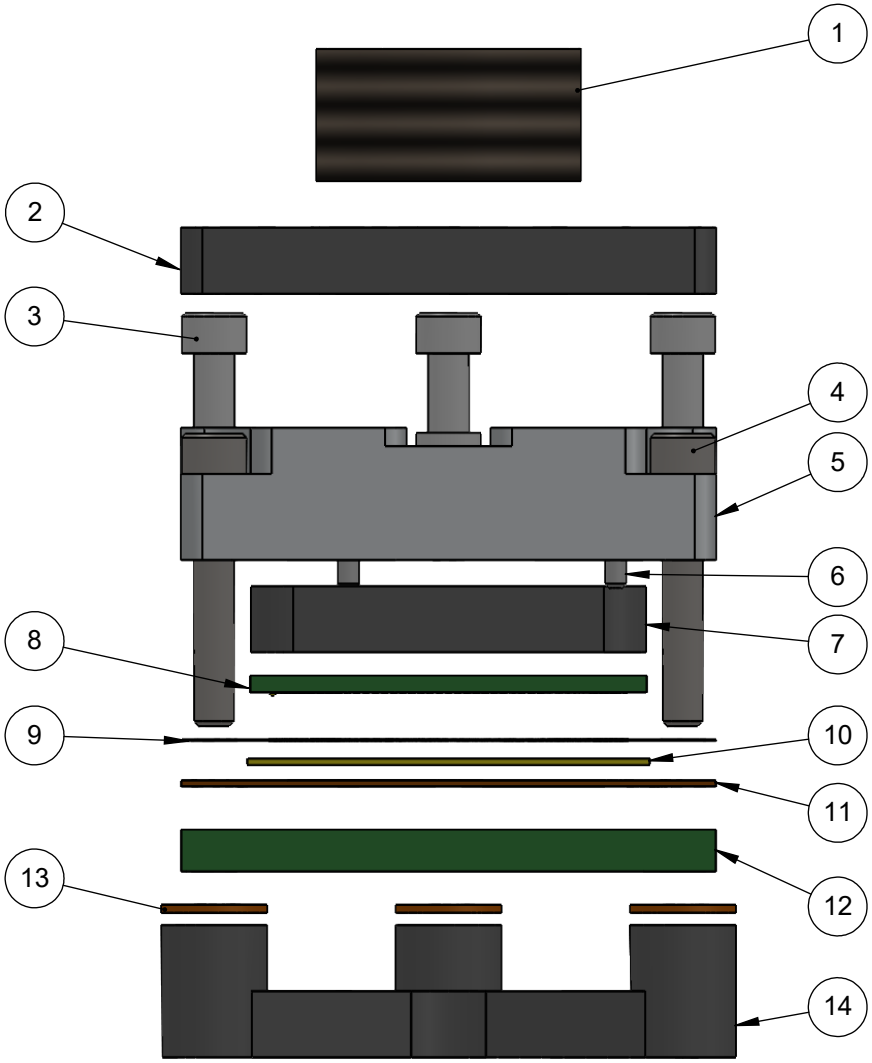

ITEM NO.	DESCRIPTION	Material
1	Compression Screw M10	7075-T6 Alumium Alloy
2	Socket Lid 15mm	7075-T6 Aluminum Alloy
3	#0-80 Shoulder Screw, 2.29mm thread length	Stainless Steel (303)
4	#0-80 X .375 LG, SOC HD CAP SCREW, ALLOY STL, BLK OXIDE	Alloy Steel
5	Socket Base, 15mm, pocket shifted 0.125mm	7075-T6 Alumium Alloy
6	Dowel Pin, 1/32" x 3/16", SS	Chrome Stainless Steel
7	Compression Plate 15mm	7075-T6 Aluminum Alloy
8	Test Chip	Material <not specified>
9	Ball Guide	Kapton Polyimide/Cirlex
10	0.25mm thick, 0.05x 0.05mm pitch, 50mm sqr, Z-axis conductive angled elastomer	20 Micron dia gold plated brass filaments arranged symetrically in a silicon rubber (63.5 degree angle), Thickness: 0.25mm
11	Elastomer Guide	Kapton Polyimide/Cirlex/Ultem
12	Test PCB	Material <not specified>
13	Insulating washer, 4mm OD.	Kapton Polyimide/Cirlex
14	15x15mm Clamshell Backing Plate	7075-T6 Aluminum Alloy

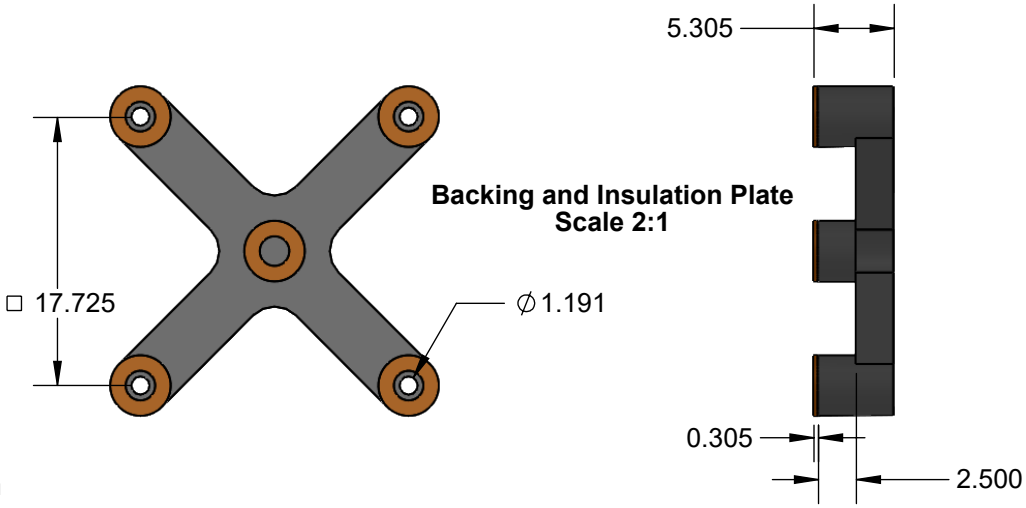

Backing and Insulation Plate
Scale 2:1

Description: Socket Assy, Insulation Plate

Primary dimension units are millimeters, Secondary dimension units are [inches], Weight is in grams.

Tolerances: Hole diameters ±0.03mm [±0.001"], Pitches (from true position) ±0.025mm [±0.001"], substrate thickness tolerance ±10%, all other tolerances ±0.13mm [±0.005"] unless stated otherwise. Materials and specifications are subject to change without notice.

SG25-BGA-2012 Drawing	Material: N/A Finish: N/A Weight: 10.64	STATUS: Released	SHEET: 4 OF 4	REV. A
 Tele: (800) 404-0204 www.ironwoodelectronics.com		ENG: M.A. Fedde	DRAWN BY: M. Raske	SCALE: 3.5:1
		FILE: SG25-BGA-2012 Dwg	DATE: 01/26/2016	