GHz BGA Socket - Direct mount, solderless

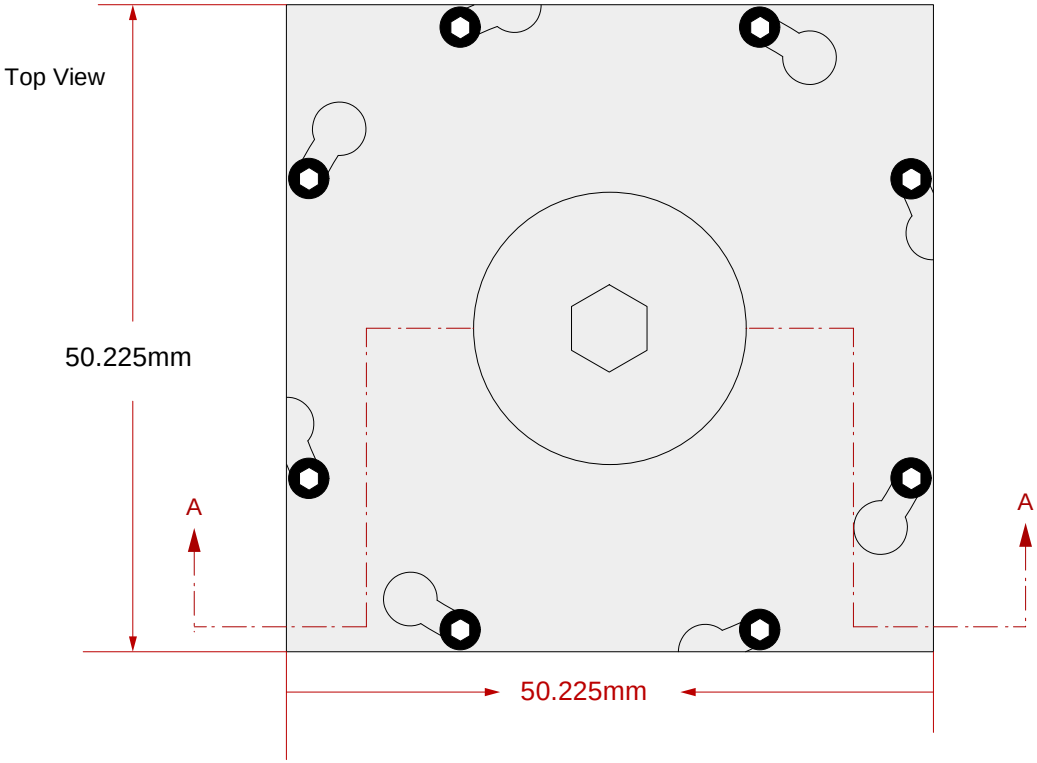

Features

- Directly mounts to target PCB (needs tooling holes) with hardware.
- High speed, reliable Elastomer connection
- Minimum real estate required
- Compression plate distributes forces evenly
- Ball guide prevents over compression of elastomer
- Easily removable swivel socket lid

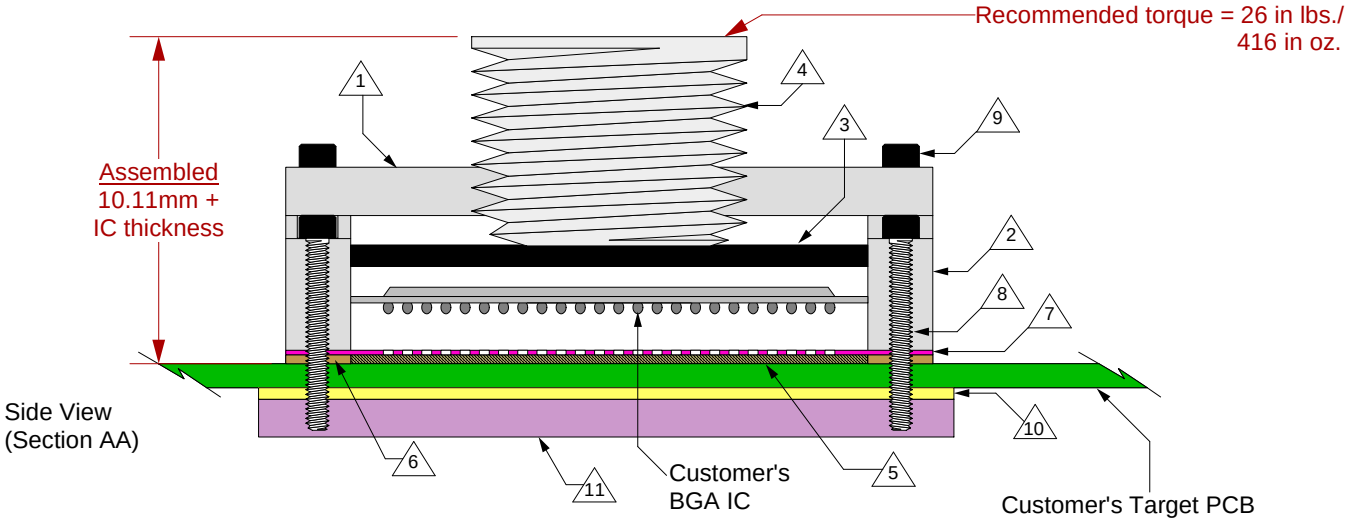

1	Socket Lid: Black anodized Aluminum. Thickness = 2.5mm.
2	Socket base: Black anodized Aluminum. Thickness = 6.5mm.
3	Compression Plate: Black anodized Aluminum. Thickness = 2.5mm.
4	Compression screw: Clear anodized Aluminum. Thickness = 5mm, Hex socket = 5mm.
5	Elastomer: 40 micron dia gold plated brass filaments arranged symmetrically in a silicone rubber (63.5 degree angle). Thickness = 0.75mm.
6	Elastomer Guide: Cirlex or equivalent. Thickness = 0.725mm.
7	Ball Guide: Kapton polyimide.
8	Socket base screw: Socket head cap, Alloy steel with black oxide finish, 0-80 fine thread , 15.815mm long.
9	Socket lid screw: Shoulder screw, 18-8 SS, 0-80 fine thread.
10	Insulation Plate: FR4/G10, Thickness = 1.59mm.
11	Backing Plate: Black anodized Aluminum. Thickness = 6.35mm.

SG-BGA-6207 Drawing	Status: Released	Scale: -	Rev: B
© 2009 IRONWOOD ELECTRONICS, INC. 11351 Rupp Drive, Suite 400, Burnsville, MN 55337 Tele: (952) 229-8200 www.ironwoodelectronics.com	Drawing: J. Glab	Date: 11/06/06	
	File: **SG-BGA-6207** Dwg	Modified: 7/21/09, AE	

All tolerances: ±0.125mm (unless stated otherwise). Materials and specifications are subject to change without notice.

Recommended PCB Layout
Top View

***Note: BGA pattern is not symmetrical with respect to the mounting holes.**

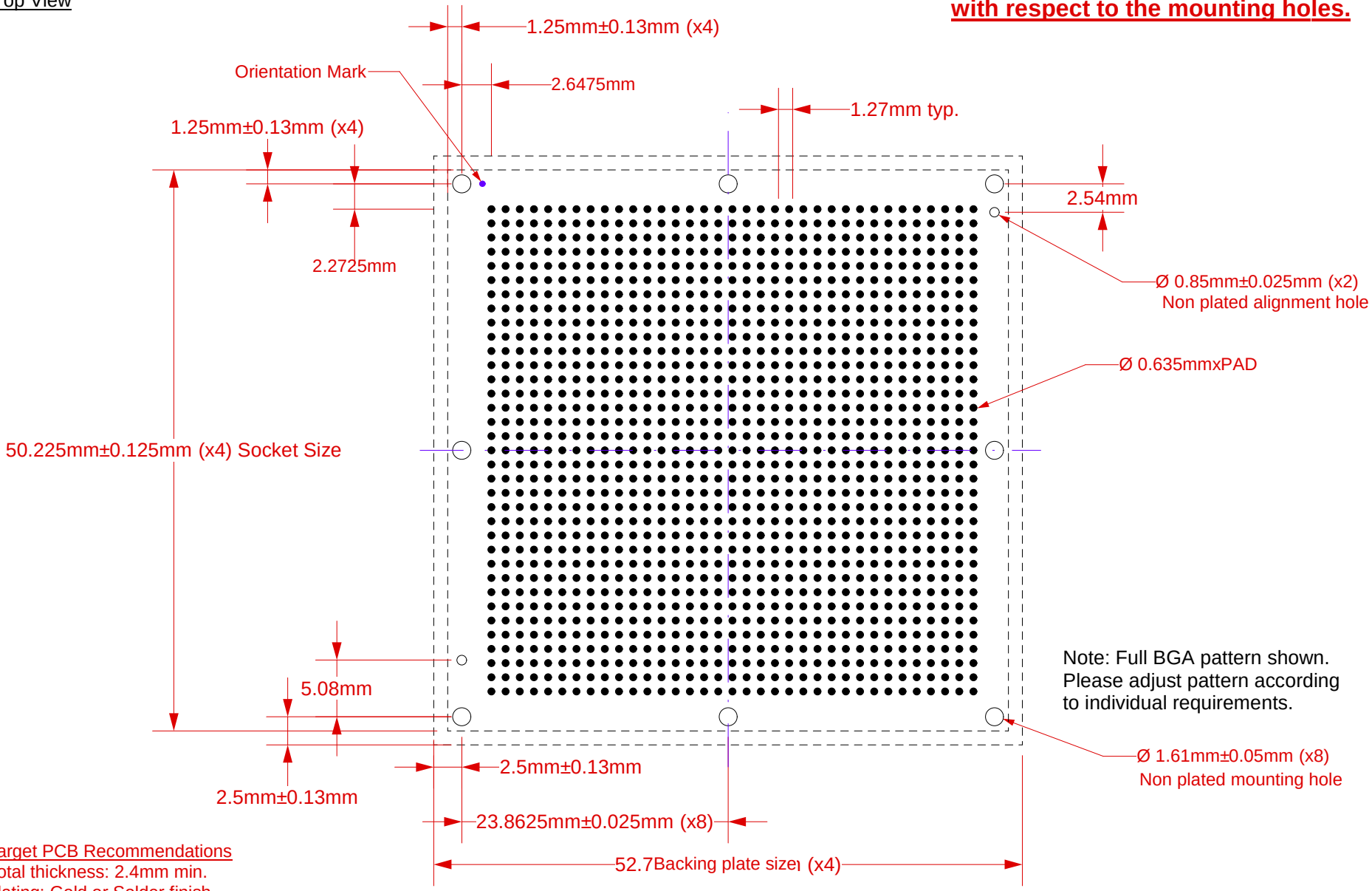

Target PCB Recommendations
Total thickness: 2.4mm min.
Plating: Gold or Solder finish
PCB Pad height: Same or higher than solder mask

NOTE: Steel backing plate may be required based on end user's application

Recommended PCB Layout Tolerances: ±0.025mm [±0.001"] unless stated otherwise.

SG-BGA-6207 Drawing	Status: Released	Scale: 2:1	Rev: B
© 2009 IRONWOOD ELECTRONICS, INC. 11351 Rupp Drive, Suite 400, Burnsville, MN 55337 Tele: (952) 229-8200 www.ironwoodelectronics.com	Drawing: J. Glab	Date: 11/06/06	
	File: **SG-BGA-6207** Dwg	Modified: 7/21/09, AE	

Compatible BGA Spec

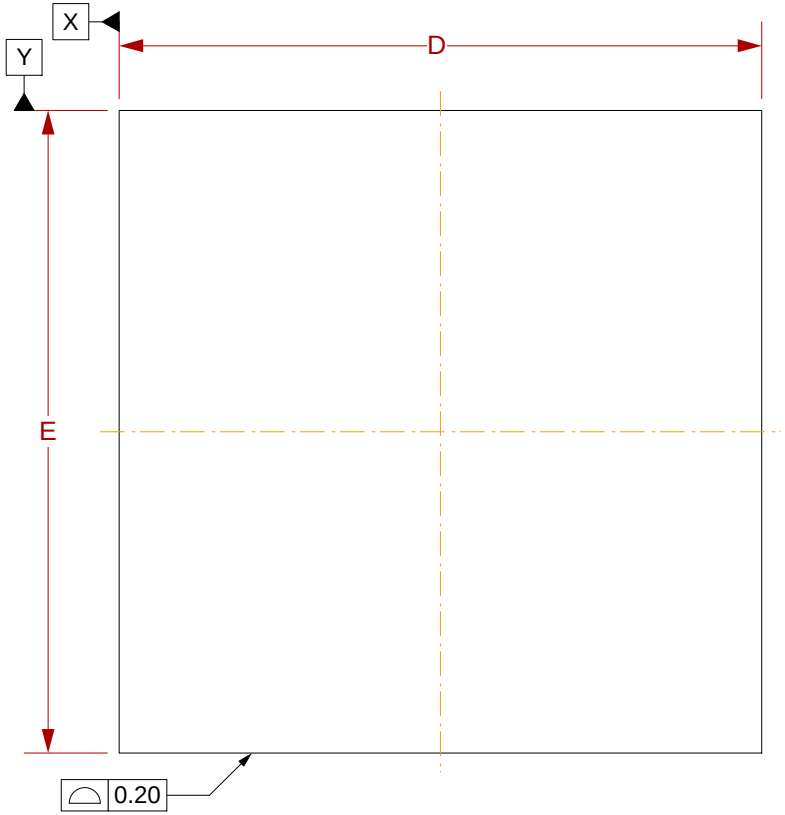

TOP VIEW

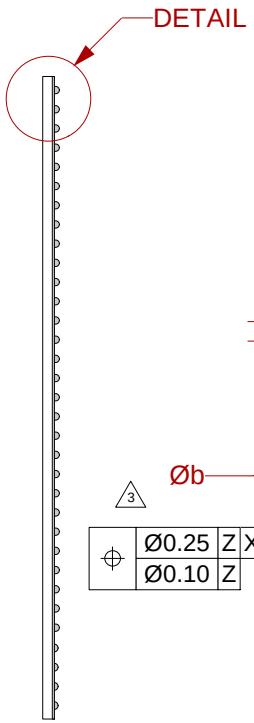

SIDE VIEW

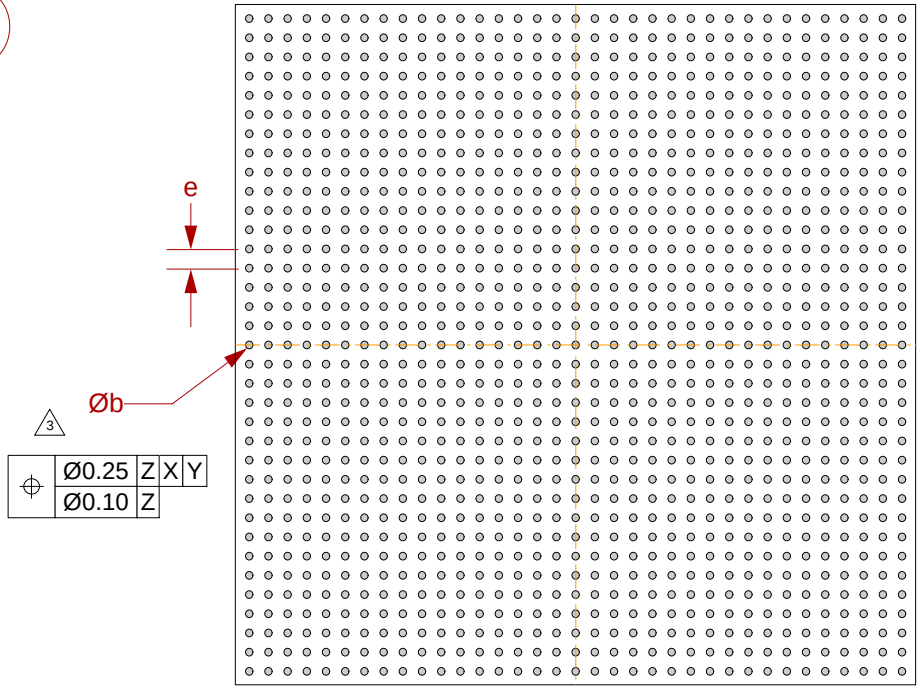

BOTTOM VIEW

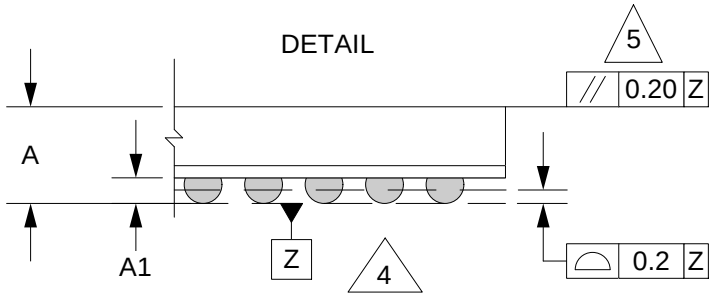

1. Dimensions are in millimeters.
2. Interpret dimensions and tolerances per ASME Y14.5M-1994.
3. Dimension b is measured at the maximum solder ball diameter, parallel to datum plane Z.
4. Datum Z (seating plane) is defined by the spherical crowns of the solder balls.
5. Parallelism measurement shall exclude any effect of mark on top surface of package.

DIM	MIN	MAX
A		3.5
A1	0.3	0.55
b		0.90
D	45.00 BSC	
E	45.00 BSC	
e	1.27 BSC	

Array: 35x35

SG-BGA-6207 Drawing	Status: Released	Scale: -	Rev: B
© 2009 IRONWOOD ELECTRONICS, INC. 11351 Rupp Drive, Suite 400, Burnsville, MN 55337 Tele: (952) 229-8200 www.ironwoodelectronics.com	Drawing: J. Glab	Date: 11/06/06	
	File: **SG-BGA-6207** Dwg	Modified: 7/21/09, AE	

Top View

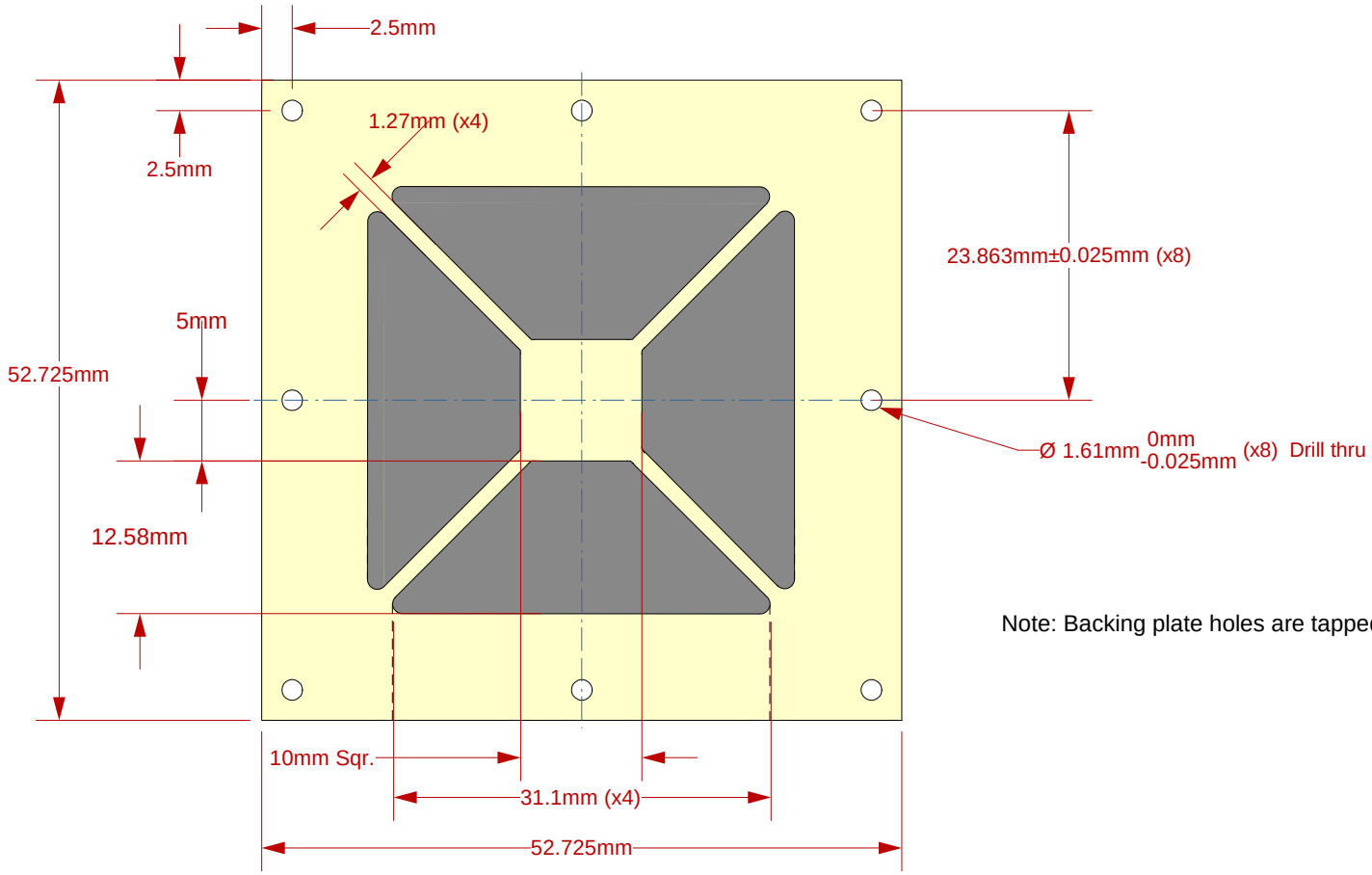

Note: Backing plate holes are tapped to accept 0-80 screws.

Side View

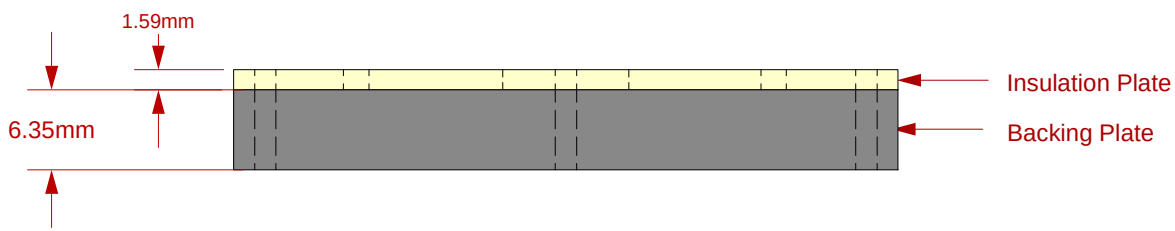

Description: Insulation Plate and Backing Plate

SG-BGA-6207 Drawing	Status: Released	Scale: -	Rev: B
© 2009 IRONWOOD ELECTRONICS, INC. 11351 Rupp Drive, Suite 400, Burnsville, MN 55337 Tele: (952) 229-8200 www.ironwoodelectronics.com	Drawing: J. Glab	Date: 11/06/06	
	File: **SG-BGA-6207** Dwg	Modified: 7/21/09, AE	

All dimensions are in mm.
All tolerences are +/- 0.125mm.
(Unless stated otherwise)